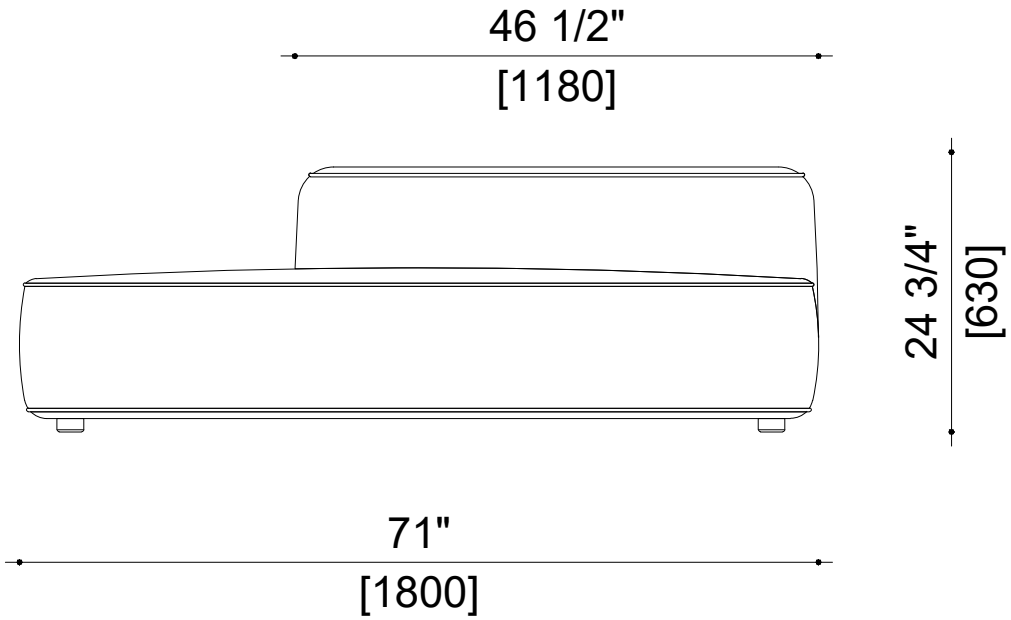
46 1/2"
[1180]
24 3/4"
[630]
71"
[1800]

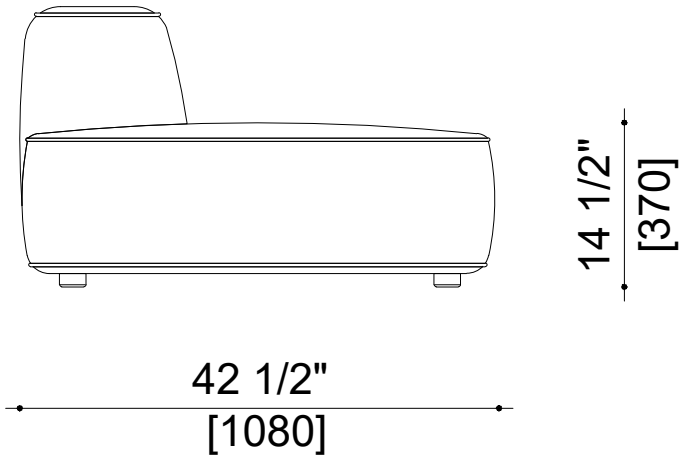
14 1/2"
[370]
42 1/2"
[1080]

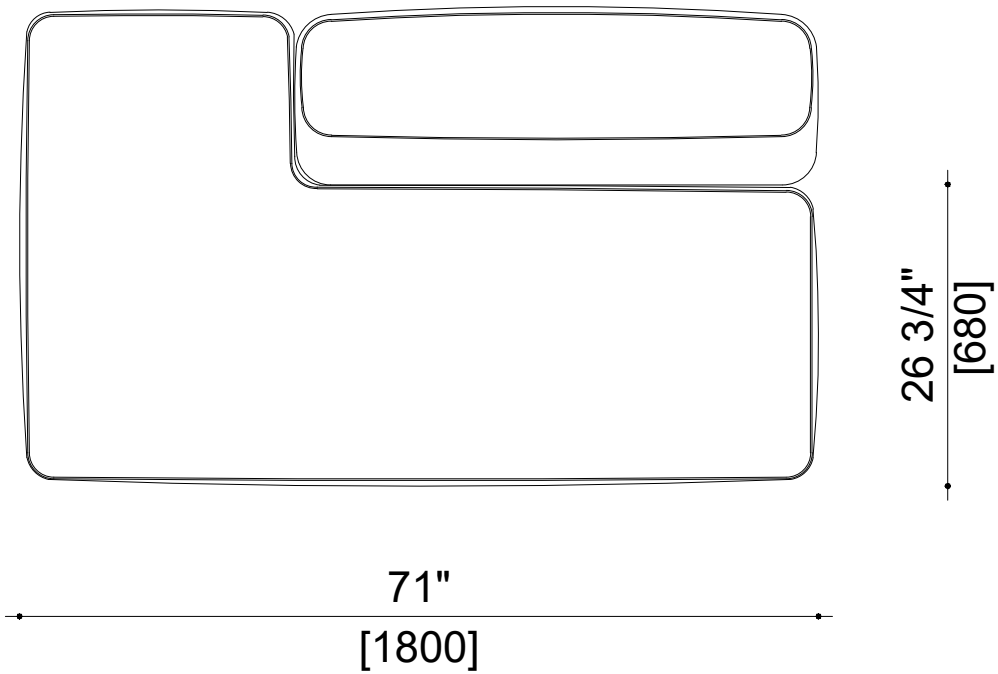
26 3/4"
[680]
71"
[1800]